PRODUCT SHEET

Description:
Wardrobe Hook "Croc", Zamak, Inlay, Retractable, Black Matt Incl. 2x M4 x10mm & 2 x M4 x16mm Screws

Item number:
22.07.521-0

Units	Box	Carton	HS Code	Barcode
Pcs.	25	125	8302500000	5704866513708

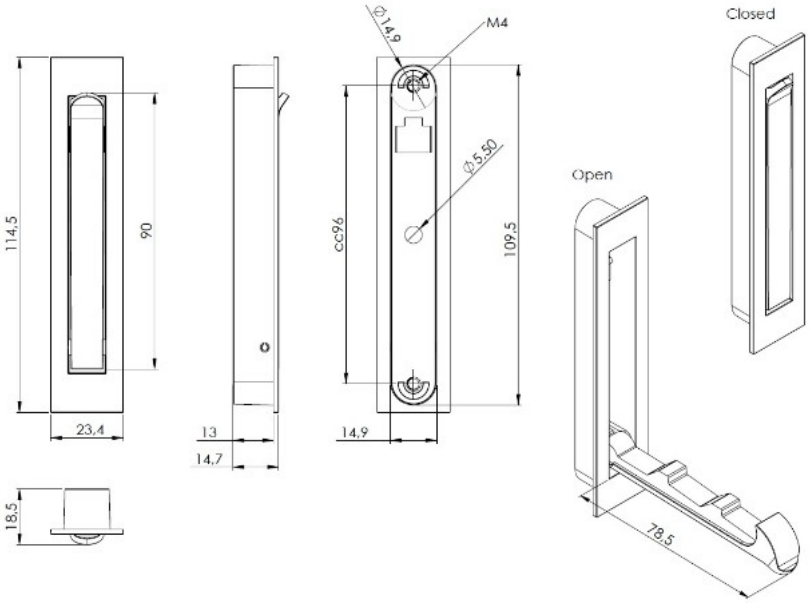

SISO A/S
Mileparken 11
DK-2740 Skovlunde
Denmark
VAT: DK 24786013

Phone +45 45 830 900

www.siso.dk
siso@siso.dk

Danske Bank
Nytorv Branch
Copenhagen
SWIFT: DABADKKK

Account no.
4180 3112 112936
IBAN Account
DK7230003112112936